COMECTA Refractometer ABBE "2WAJ"

LCD DIGITAL THERMOMETER BUILT-IN.

APPLICATIONS

Ideal for measuring the refractive index ηD of liquids, solids and sugar concentrations (0 - 95% = ηD 1.333-1.531).
Indispensable instrument for industrial chemistry, petroleum, pharmaceutical, food oils and fats, sugars, universities etc.

FEATURES

Telescopic system X2 magnification.
Eyepiece with dioptric correction.
Connection for external water bath.
Thermometer 0-70 °C. To see the sample temperature.
Robust metallic construction.
Weight: 2.6 Kg.
Measurements: 240 mm high x 100 mm wide x 200 mm depth.

Measuring range:
Refraction index ηD: 1300 - 1700.
Brix: 0 - 95%.

Measuring definition:
Refraction index ηD: 0.0005.
Precision ηD: ±0.0002.
Brix: 0.25%. Precision: ±0.1%.

Part No. 5901008
Supplied complete with
- Aluminium carry case,
- 1 bottle of Naphthalene Bromide,
- 1 calibration standard,
- 1 screwdriver and dust cover.

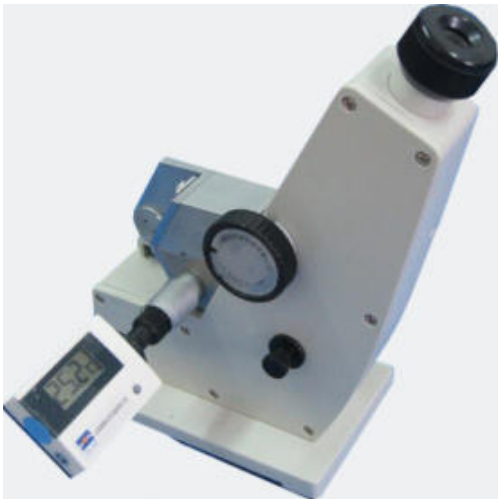

COMECTA Digital ABBE refractometer "WYA-2S"

APPLICATIONS

Ideal for measuring the refractive index of liquids, solids and sugar concentrations (° Brix), industry: chemical, petroleum, food, pharmaceutical, universities and research etc.

FEATURES

Apparatus equipped with an optical system made of a telescope with dispersion correction, used to define the division line between dark and bright areas.

Precise optics with automatic temperature compensation displayed as °Brix and sample temperature.

Stabilized temperature connection for a water bath.
RS-232 output with software included.

Measuring range:
Refraction index ηD: 1.3000 - 1.7000
Brix Bx - TC: 0 - 95%
Brix Bx: 0 - 95%

Measurement scale definition:
Refraction index ηD: ± 0.0002
Brix Bx - TC: ± 0.1%
Brix Bx: ± 0.1%

Temperature:
Working range: 0 - 50 °C.
Correction range of Bx, in respect to temperature: 15 - 45 °C.

Optimum precision





Supplied complete with dust cover and maintenance box that includes:
- 1 bottle of Naphthalene Bromide,
- 1 calibration standard,
- 1 Hex key,
- 3 lamps 6.3V, 0.25 A.
- 3 fuses 1 A.

MODEL

Part No.	Height / Width / Depth (exterior) cm			Power supply	Weight Kg
5901007	38	18	33	220V ±20V 50/60Hz	10

CONTROL PANEL

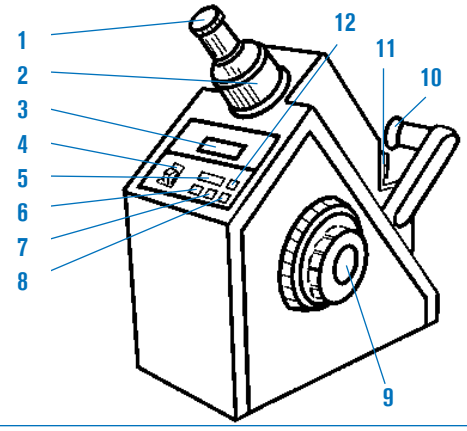

Technical description

1. Monocular system.
2. Telescope adjustment.
3. Digital display.
4. Mains switch "POWER".
5. Push button "READ".
6. Push button for Brix with temperature correction "Bx - TC".
7. Push button for the refractive index "ηD".
8. Push button for Brix without temperature correction "Bx".
9. Optical control.
10. Light intensity unit.
11. Refractometer prism.
12. Push button for temperature indicating. "TEMP".