Water and oil baths “Univeba”

WATER BATH: ADJUSTABLE TEMPERATURE FROM AMBIENT +5 °C TO 110 °C STABILITY ±1 °C.
OIL BATH: ADJUSTABLE TEMPERATURE FROM AMBIENT +5 °C TO 200 °C STABILITY ±2 °C.

SAFETY:
CONFORMS TO THE DIN STANDARD 12877 BY INCORPORATING A MANUALLY RESET OVER TEMPERATURE SAFETY CUT-OUT.

APPLICATIONS

To be used with a rotary evaporator or as a stand alone Bains Marie bath.

FEATURES

Tank interior and exterior case made of AISI 304 stainless steel. The heater element is embedded in a protective INCOLOY stainless steel shield.

CONTROL PANEL

Illuminated main power switch indicator lamp. Hydraulic temperature thermostat regulator synchronised with an indicator lamp. Safety thermostat cut out indicator lamp.



MODELS

Part No.	Maximum Temperature °C	Capacity litres	Ø (usable)	Height cm	Height / Widht / Depth (exterior) cm	Power W	Weight Kg
3000400	110	2.5	18	13	19 22 27	390	4
3000401	200	2.5	18	13	19 22 27	640	4

ACCESSORIES MADE OF STAINLESS STEEL

1- **Heating element cover shelf.**
Part No. 6000033

2- **Reduction ring** cover lid of 110, 80, 60 and 37 mm Ø. With a thermometer location hole in the lid. Part No. 7004001

3- **Tube rack** for 24 haemolysis tubes up to 13 mm Ø.
Part No. 7004002

4- **Tube support** rack for 24 tubes up to 18 mm Ø.
Part No. 7000541

5- **Thermometer.**
Part No.
1000100 up to 100 °C.
1095250 up to 250 °C.

Sand baths “Combiplac-Sand”

ADJUSTABLE PLATE TEMPERATURE UP TO 400 °C.

FEATURES

Electronic energy heater controller. The steel hotplate surface has an evenly distributed heater element providing homogeneous heat distribution.
The non warping AISI 304 stainless steel sand bath can be easily removed for cleaning.
The Hotplate can be used independently without the sand bath. The hotplate casing is made of AISI 304 stainless steel.



CONTROL PANEL

Mains power switch with luminous “On” indicator lamp.
Electronic heater power control between 0 to 100 %.
Heater operation indicator lamp.
The back of the unit is fitted for an electronic thermometer “Sensotherm” or digital electronic controller “Electemp-TFT” described under regulators and controllers (see page 293).XXX

MODELS

Part No.	Height / Widht/ Depth (usable) cm	Height / Widht / Depth (exterior) cm	Power W	Weight Kg
6000708	5 18 38	18 22 41	2300	13
6000709	5 30 30	21 32 35	2800	15

Clamps and Stands

CLAMPS MADE OF LIGHT WEIGHT "DURAL CROM" ALLOY EXTRAORDINARILY STRONG.
TONGS MADE OF AISI 304 STAINLESS STEEL.
RETORT STANDS - LABORATORY JACKS AND SCAFFOLDING.

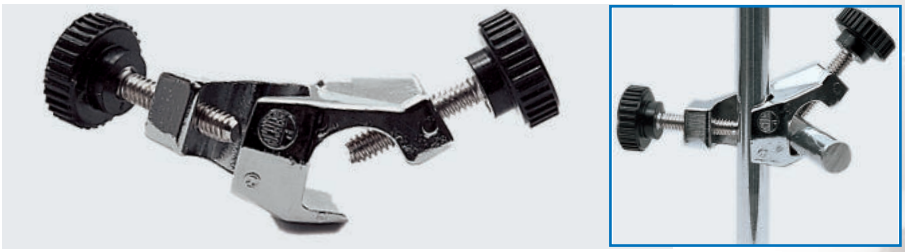

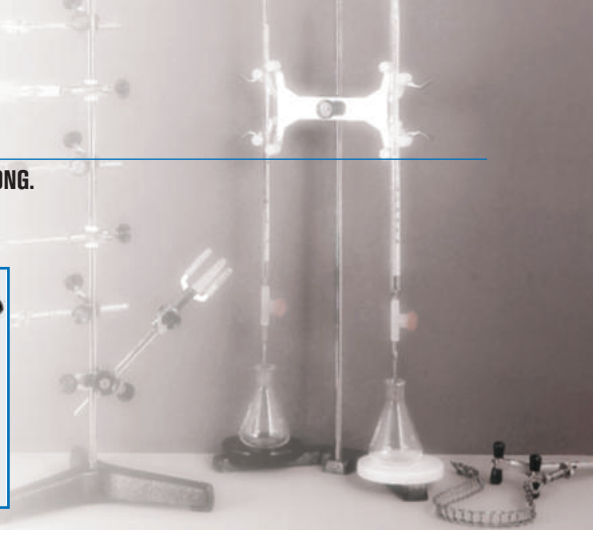

BOSSHEAD
Chrome plated. For Ø from 5 to 17 mm.
Part No. 1000069

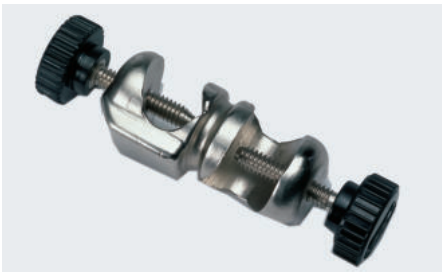

BOSSHEAD "MINI"
Chrome plated. For Ø from 5 to 12 mm.
Part No. 1001460

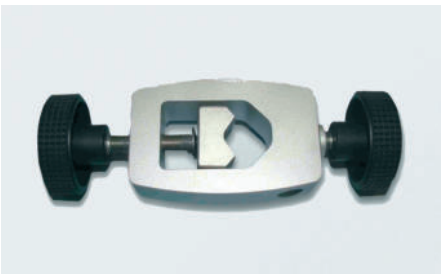

BOSSHEAD XL
Maximum opening. For rods 13 to 32 mm Ø.
Part No. 5057022



BOSSHEAD "MEDI"
For Ø from 5 to 20 mm.
Part No. 1001461 Chrome plated.
Part No. 1001462 Anodised black.

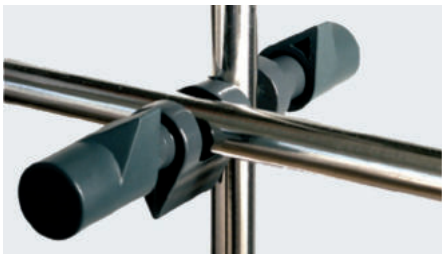

BOSSHEAD "SUNTECH"
For retort bars of 5 to 22 mm Ø.
With screw clamp joints. Ideal for supporting overhead stirrers.
Part No. 5900600



BOSSHEAD "MAXIM"
For large diameters.
Chrome plated with one opening to hold rods up to 30 mm Ø. Second opening up to 20 mm Ø.
Part No. 7000408

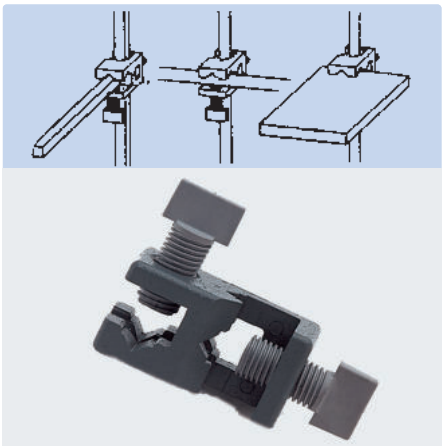

BOSSHEAD "PASS"
Original Phywe.
For joining and clamping multipurpose, round or rectangular rods up to 12 mm across.
For cross T and parallel arrangements.
Part No. 7204055

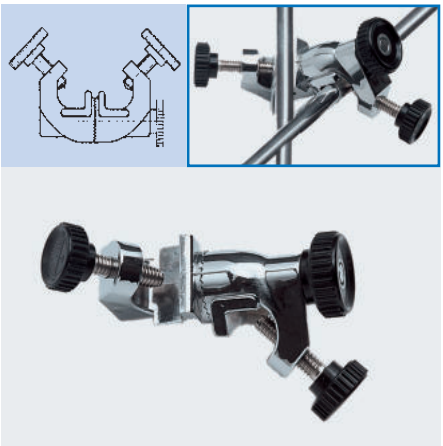

BOSSHEAD "GIROFIX"
Conforms to DIN standard 12895-E16.
Chrome plated with swivel toothed clamp for holding rods at any angle. For rod Ø from 5 to 15mm.
Part No. 7000531



J.P Selecta

OIRIGINAL BOSSHEAD "TREVINGE"
Made of chrome plated "Dural" alloy.
Due to its strength, it is suitable for multilevel and three dimension constructions.
Part No. 7008133 For Ø of 9 to 13 mm.
Part No. 7008253 For Ø of 19 to 25 mm.