EASY



Bottle top dispenser EASY 20K

Please read the User Manual carefully before use, and follow all operating and safety instructions!

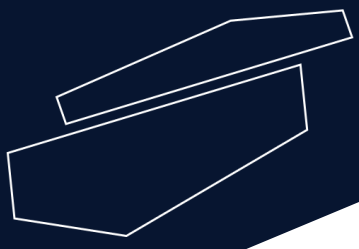

user manual

english / español

User manual

EN

Bottle top dispenser, EASY 20K

Introduction

Users must read this manual carefully before using the equipment, and follow the instructions and procedures in order to be aware of all the precautions, as well as in order to obtain the maximum benefits and duration of the equipment.

Service

If help is needed, contact with your supplier/manufacturer or Letslab via:

www.letslab.com

Please, provide the customer service representative with the following information:

- Serial number (on the back side)
- Description of the problem
- Your contact information

Warranty

This instrument is guaranteed to be free from defects in materials and workmanship under normal use and service, for a period of 24 months from the date of invoice. The warranty is extended only to the original purchaser. It shall not apply to any product or parts which have been damaged on account of an improper installation, improper connections, misuse, accident or abnormal conditions of operation. For claim under the warranty, please contact your supplier.

1. Safety instructions

	Place the Bottle top dispenser EASY 20K on a flat, horizontal, and stable table, leaving at least 30 cm of free space on each side. Make sure that the surface is adequate for the device's weight.
	This item must be used only by previously qualified staff that is familiar with the equipment and knows how to operate it according to the instructions manual.
	Carefully read the instructions in this manual before using the device.
	Use the necessary protective clothes, eye protection and gloves according to the reagent's manufacturer's information.
	Pay special attention to splashes and protect yourself adequately

- Do not operate this instrument in any manner not described in this 'User manual'.
- In case of abnormal circumstances during the manipulation of this device, please stop the operation of the equipment and contact your supplier.
- The precautions described in this 'User manual' are carefully developed in an attempt to cover all the possible risks. However, it is also important that you are alert for unexpected incidents.
- Use this instrument only for dispensing liquids, with strict regard to the defined operating exclusions and limitations. (chart on p.11)
- Explosive liquids are also forbidden to use with this dispenser.
- Before use, check the instrument for visual damages (piston difficult to move, sticking valves or leakage…) in case of trouble, immediately stop dispensing.

2. Use Instructions

This equipment is designed for dispensing liquids taking into account the following limits:

- 15 to 40 °C of temperature working range
- Steam pressure up to 500 mbar
- Density up to 2.2 g/cm3

2.1 Operating limitations

Concentrated hydrochloric acid and concentrated nitric acid, chlorinated and fluorinated hydrocarbons, or liquids which form deposits may make the piston difficult to move or may cause jamming.
When dispensing flammable media, make provisions to avoid static charging, e. g., do not dispense into plastic vessels; do not wipe instruments with a dry cloth.

	**Operating exclusions : Never use this instrument for:** -liquids attacking FEP, PFA, PTFE or Hastelloy -liquids attacking borosilicate glass (hydrofluoric acid) -liquids which are decomposed catalytically by Hastelloy -suspensions as solids particles could clog or damage the instrument.

3. Inspection

3.1. Unpacking

Unpack the equipment carefully and check for any apparent damages that may have arisen from transportation. If necessary, please contact your supplier.

	**Note:** If there is any apparent damage to the equipment, do not use it. Inform your supplier.

3.2. Items list

The package includes the following items:

Items	Qty
Dispenser main body	1
Discharge tube	1
Filling tube	1
Mounting tool	1
Set of PP bottle adapters	1
Instructions manual	1

Please check that all the items are present and inform your supplier immediately if any of the above is missing.

4. Control

4.1 Bottle top dispenser

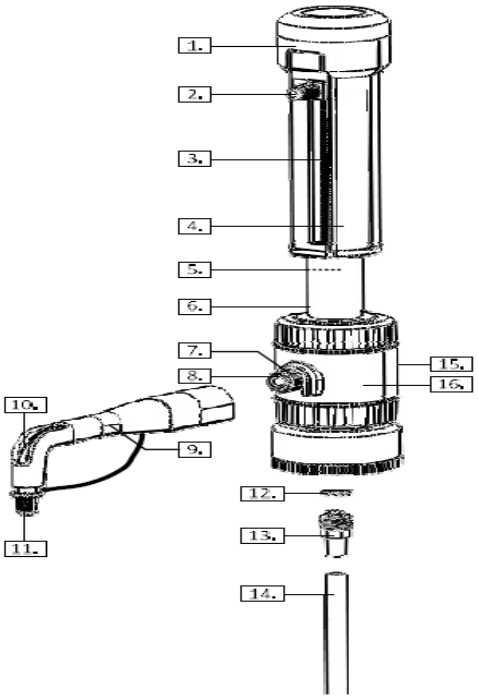

Components

1. Piston seat
2. Volume adjustment knob
3. Scale pointer
4. Cylinder sleeve
5. Piston
6. Glass cylinder
7. Seal
8. Discharge valve
9. Discharge tube sleeve
10. Discharge tube
11. Closure cap
12. Filling seal
13. Filling valve
14. Filling tube
15. Air vent cap
16. Valve block

5. Assembly Instruction

5.1 Tighten the discharge valve with tools.

5.2 Push the discharge tube as far as possible into the discharge valve.

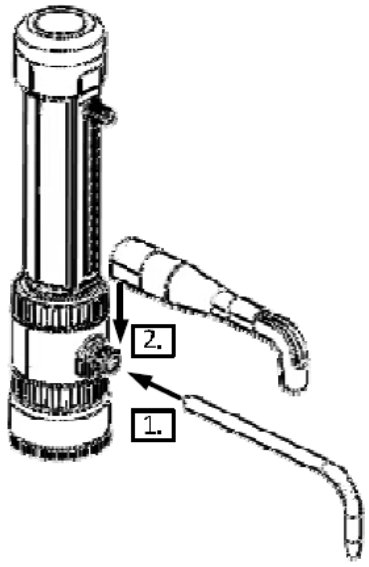

5.3 Connecting the filling tube

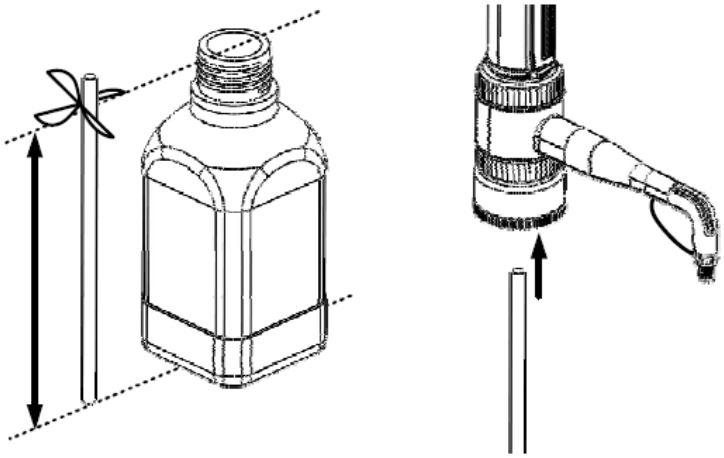

- Cut off the bottom of the filling tube diagonally.
- Push the filling tube into the valve block as far as possible – with the diagonal end down.

5.4 Mounting the instrument on the bottle

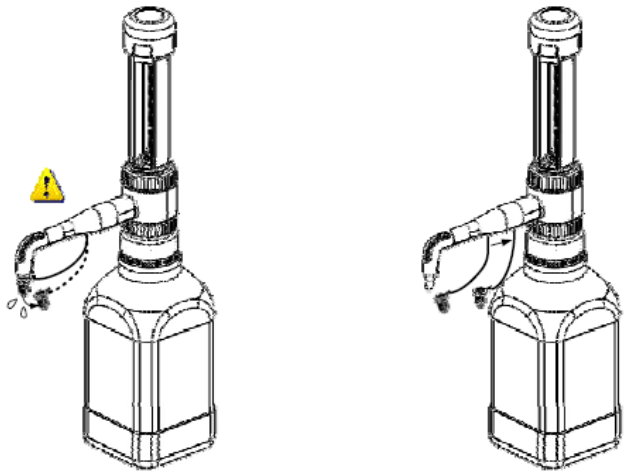

- Can be done by screwing directly onto a GL 45 screw thread. For other bottles use the included adapters.
- Hold the discharge tube and carefully remove the cap
-Slide the cap lock backwards on the tube support, away from the discharge tube.

	**Attention:** -The adapters supplied with the instrument are made of polypropylene (PP), and can only be applied for media which does not attack PP. -For small bottles use a bottle stand to prevent tipping over -Reagent may drop off the discharge tube end and cap, be careful.

6. Dispensing

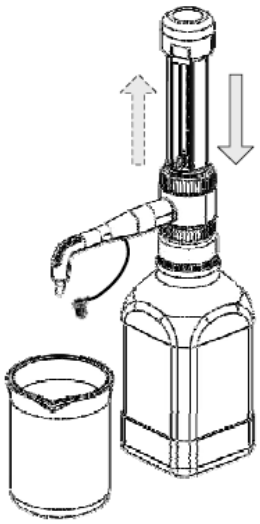

6.1 Hold an appropriate collecting vessel under the discharge tube opening.
6.2 Gently pull the piston up, then press it down rapidly.
6.3 Repeat this procedure until most of the air bubbles in the glass cylinder and discharge tube have been removed.
6.4 Before using the instrument for the first time, ensure it is rinsed carefully or discard first few samples dispensed

	**Attention:** -The discharge tube must always point away from the user or any other person. -Never press down the piston when the closure cap is on. The reagent could spill.

7. Setting the volume

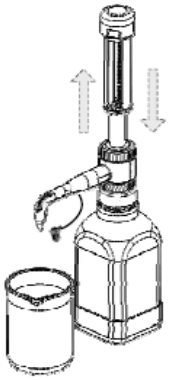

7.1 Place an appropriate collecting vessel under the discharge tube.
7.2 Pull the piston up slowly and evenly to the upper stop to draw reagent into the glass cylinder.
7.3 Push the piston down gently and evenly to dispense the reagent into the vessel

8. Cleaning

The instrument must be cleaned in the following situations to assure correct operation:
- If the piston becomes stiff and difficult to move
- After dispensing liquids that can form deposits
- Before changing the reagent
- Prior to long term storage
- If some liquid has accumulated in the closure cap
- Prior of sterilization
- Before valves replacement

8.1 Ensure that the cap is locked

8.2 Empty and unscrew the instrument from the bottle and lift the instrument so that the filling tube is out of the liquid but in the bottle.

8.3 Carefully tap the filling tube against the bottle from the inside so that the reagent runs back into the bottle.

8.4 Remove the closure cap, and dispense the remaining reagent into the bottle by repeated piston operation.

8.5 Mount the instrument onto another bottle filled with an appropriate cleaning solution.

8.6 Flush the instrument.

8.7 Empty the bottle, flush it and fill it with water. Repeat step 6 and 7.

8.8 Empty the instrument. Figure 10

8.9 Unscrew the piston seat (1).

8.10 Carefully pull the piston (5) out of the glass cylinder (6) by pulling on the piston seat only.

8.11 Carefully remove deposits at the edge of the glass cylinder with a screw driver. Clean piston and cylinder with a bottle-brush.

8.12 Carefully reassemble the instrument in the reverse order. Flush instrument with distilled water.

9. Cleaning and replacing the filling valve



9.1 Remove the filling tube

9.2 Unscrew the filling valve using the mounting tool. Remove the valve with its sealing washer. Make sure the sealing washer does not remain in the valve block.

9.3 Rinse the filling valve in the cleaning solution, and clean with a soft brush. If the ball gets stuck, push it with a pointed instrument to release the valve ball.

9.4 Screw the cleaned/new filling valve together with its sealing washer into the valve block and tighten it firmly using the mounting tool.

10. Cleaning/replacing the discharge valve

10.1 Unscrew the discharge tube.
10.2 Remove the valve locking ring.
10.3 Unscrew the discharge valve using the mounting tool. Remove the valve with its sealing washer. Make sure the sealing washer does not remain in the valve block.

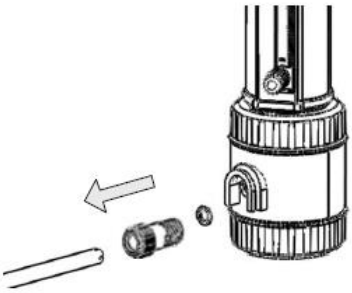

10.4 Rinse the discharge valve in the cleaning solution, and clean with soft brush. If the ball gets stuck, push it with a pointed instrument to release the valve ball (e.g., disposable pipette tip), and release the valve ball.
10.5 Screw the cleaned/new discharge valve together with its sealing washer into the valve block and tighten it firmly using the mounting tool.
10.6 Slide on the valve locking ring making sure the two prongs properly align with the notches.

11. Autoclaving

This instrument withstands steam sterilization at 121 °C, 2 bar absolute (15 psi) for 20 minutes in accordance with widely used guidelines. It is the user's responsibility to ensure effective autoclaving.

11.1. Preparation prior to the autoclaving

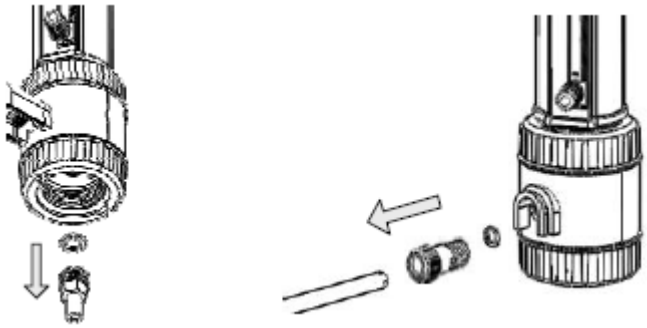

1. Clean the instrument before sterilization.
2. Remove the discharge tube (10) with removed closure cap (11), filling tube (14), and put all parts on a towel.
Avoid contact with hot metal surfaces.
3. Lay the instrument **with piston in down position** on the towel.
4. Autoclave all parts

	**Note:** Allow to cool down in the closed autoclave to avoid deformation through too rapid cooling. After every autoclaving, inspect all parts for deformities or damage. If necessary, replace them. Do not reassemble the instrument until it has cooled down to room temperature (cooling time approx. 2 hours). Mounting tool can be steam sterilized at 121 °C.

12. Checking the volume

The accuracy and coefficient of variation of the instrument are determined gravimetrically as follows:
- Set to the nominal volume.
- Dispense distilled H_2O.
- Weigh the dispensed quantity on an analytical balance.
- Calculate the dispensed volume taking the temperature into account.
- Perform at least 10 dispensing and weighing operations.
- Calculate the accuracy (A%) and the coefficient of variation (CV%) by means of the formular used in statistical quality control. The proceeding is described e.g., in DIN EN ISO 8655-6. Observe the operating manual of the balance manufacturer and the corresponding standards.

13. Calculations (for the nominal volume)

Mean value $\bar{x} = \frac{\sum fx}{n}$

$x_{i=}$ results of weighings
n= number of weighings

Mean volume
Z= correction factor

–

Accuracy

Standard deviation

$V_{0=}$ nominal volume

Coefficient of variation

14. Trouble shooting

Problem	Possible cause	Corrective action
Piston with difficulty to move	Dirt, possible formation of crystals	-Stop dispensing immediately. Loosen the piston by circular motion without disassembling. Follow all the cleaning instructions.
Filling not possible	-Volume adjusted to minimum setting -Sticking filling valve	-Set the required volume -Clean the filling valve and replace with sealing washer if necessary.
Instrument does not dispense liquid	- Closing cap is on -Discharge tube not firmly connected or damaged	-Remove closing cap -Push on the closing cap. Hold the piston in place, and push the original manufacturer's discharge tube on firmly. Replace a deformed or damaged discharge tube.
Air bubbles in the instrument	- Reagent with high vapor pressure has been poured too quickly. -Seal not inserted, knurled locking nuts not firmly connected -Air not expelled from the instrument -Filling tube not firmly connected or damaged -Valves dirty, not firmly installed or damaged	-Pour the reagent slowly. -Double check that seal (12) is in place, and that the knurled locking nuts at the discharge tube are firmly seated and finger tightened -Priming the instrument -Push the filling tube on firmly. If necessary cut off approx. 1 cm of tube at the upper end and reconnect it or replace filling tube. -Cleaning procedure. Tighten the valves using the mounting tool. If necessary, replace the valves and sealing washers.
Dispensed volume is too low	-Discharge tube not firmly connected or damaged -Filling tube not firmly connected or damaged -Valves not firmly installed or damaged -Sticky filling valve	-Push the original manufacturer's tube on firmly. -Cleaning procedure. Push the filling tube on firmly. If this does not suffice, cut off approx. 1 cm of tube at the upper end and re-connect it or replace filling tube. -Clean the instrument. Tighten the valves using the mounting tool, if necessary replace the valves and sealing washers. - Clean or replace discharge tube, if necessary.

Nota importante para los aparatos electrónicos vendidos en España

Instrucciones sobre la protección del medio ambiente y la eliminación de aparatos electrónicos:



Los aparatos eléctricos y electrónicos marcados con este símbolo no pueden ser eliminados en forma de residuos urbanos.

De conformidad con la Directiva 2012/19/UE, los usuarios de la Unión Europea de aparatos eléctricos y electrónicos, tienen la posibilidad de devolver sus RAEE para su eliminación al distribuidor o fabricante del equipo después de la compra de uno nuevo. La eliminación ilegal de aparatos eléctricos y electrónicos es castigada con multa administrativa.

Remarque importante pour les appareils électroniques vendus en France

Informations sur la protection du milieu environnemental et élimination des déchets électroniques :



Les appareils électriques et électroniques portant ce symbole ne peuvent pas être jetés dans les décharges.
En réponse à la règlementation, Labbox remplit ses obligations relatives à la fin de vie des équipements électriques de laboratoire qu'il met sur le marché en finançant la filière de recyclage de ecosystem dédiée aux DEEE Pro qui les reprend gratuitement (plus d'informations sur www.ecosystem.eco).
L'élimination illégale d'appareils électriques et électroniques est punie d'amende administrative.

Nota importante per le apparecchiature elettroniche vendute in Italia

Istruzioni sulla protezione ambientale e sullo smaltimento dei dispositivi elettronici:



Le apparecchiature elettriche ed elettroniche contrassegnate con questo simbolo non possono essere smaltite come rifiuti urbani.
In conformità con la Direttiva 2012/19 / UE, gli utenti dell'Unione Europea di apparecchiature elettriche ed elettroniche hanno la possibilità di restituire i propri RAEE per lo smaltimento al distributore o al produttore di apparecchiature dopo averne acquistato uno nuovo. La rimozione illegale di apparecchiature elettriche ed elettroniche è punibile con una sanzione amministrativa.

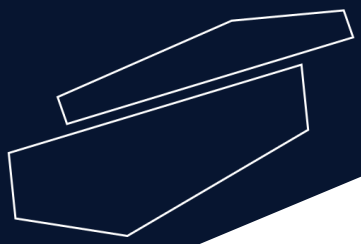

www.letslab.com