letslab®

DELIVERING LAB SOLUTIONS



INC-S Shaking Incubator

Please read the User Manual carefully before use, and follow all operating and safety instructions!

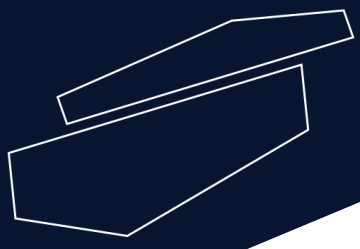

user manual

english

User Manual

EN

INC-S Shaking Incubator

Preface

Thank you for purchasing our product. Users should read this manual carefully, follow the instructions and procedures, and beware of all the preventive measures when using this instrument.

Service

If help is needed, you can always contact your dealer or Letslab via **www.letslab.com**.

Please, provide the customer service representative with the following information:

- Serial number
- Description of the problem
- Your contact information

Warranty

This instrument is guaranteed to be free from defects in materials and workmanship under normal use and service, for a period of 24 months from the date of invoice. The warranty is extended only to the original purchaser. It shall not apply to any product or parts that have been damaged due to improper installation, improper connections, misuse, accident, or abnormal conditions of operation.
For claim under the warranty, please contact your supplier.

Introduction

Thank you for choosing to use our Shaking Incubator INC-S. This series of products combines temperature control, incubation, and oscillation capabilities for use in a variety of biochemical applications. It is widely used for bacterial culture, fermentation, hybridization, biochemical reactions, and research involving enzymes and cell tissues with high requirements for temperature and oscillation frequency. It plays an important role in medicine, biology, pharmaceuticals, food, the environment, and other scientific fields.

Reminder

This manual provides detailed information on the product features, usage methods, precautions, etc. To ensure a better understanding, convenient and safe use of this product, please read this manual carefully before use.

After you receive the product, please confirm whether it is the same as the one you ordered. Then, confirm whether the appearance of the product is intact and the random accessories match the packing configuration list. If the product model you received is inconsistent with your order or the appearance is damaged or there are not enough accessories, please contact our sales staff in time.

1. Safety Instructions

We strongly urge you to pay close attention to the following instructions, as failure to do so could cause serious damage or even death.

- Read the product instruction manual before using this product.
- Do not put volatile, flammable, or explosive substances in the machine, as this could cause an explosion or fire.
- Do not place the device in an area exposed to rain, moisture, or splashing, as this may result in electrical leakage, short circuiting, or electric shock.
- Non-professional technicians must not disassemble, repair, or modify the equipment, as improper operation may cause fire or electric shock to personnel.
- Do not damage the power plug or the power cord. If it becomes damaged, the power cord must be replaced, otherwise it may cause fire or electric shock.

We strongly urge you to pay close attention to the following instructions, as failure to do so could cause personal injury, equipment damage and related property damage.

- This equipment should be installed on a firm ground, otherwise it could cause injury to personnel due to equipment falling.
- Please use the designated power supply indicated on the nameplate. This equipment must be installed on the ground to prevent electric shock and fire due to electrical leakage.
- Do not touch the power plug with wet hands, as there is a risk of electric shock.
- Before carrying out any repairs or maintenance, the power must be disconnected to prevent electric shock or injury.
- Wear gloves when repairing or maintaining the equipment to prevent injury.
- Do not damage the power cord or use a non-specified power cord. Do not connect the power cord in the middle section or use a long, flexible wire, as this may lead to electric shock or fire.
- Do not remove the power plug during operation or pull the power cord to unplug.
- If you notice the equipment running abnormally, unplug the power plug immediately and stop the equipment.
- If the equipment will be idle for an extended period in an unsupervised area, ensure that the equipment door is completely closed.

We strongly urge you to pay close attention to the following instructions, as failure to do so could cause injury or equipment damage.

Other Necessary Considerations:

- Adjust the feet so that the equipment is installed horizontally, and all four feet should be in contact with the support surface. There should be no gaps or imbalances.
- Use a separate power outlet fitted with a grounding wire. Tighten the power plug when in use.
- Turn off the power and unplug the power plug before removing the equipment.
- Only touch the inner wall of the door carefully as it may be hot.
- Non-professional technical staff should not disassemble the machine privately. Only professional staff should repair and replace parts.
- The internal parameters must be set by a specific management person to prevent the controller program's function from being disrupted by incorrect setting operations.
- The installation location of the equipment must be at least 20 cm away from the wall and other objects.
- Open or close the door gently. Forceful opening or closing of the door can easily damage the equipment.
- The surface of the equipment must not be exposed to volatile chemicals such as gasoline or thinner.
- Keep the inside and outside of the machine clean by regularly removing debris and smudges.

2. Main Product Features

1. The large LCD screen displays temperature, speed, and working time continuously and accurately in real-time, and the menu interface is easy to operate.
2. The temperature and oscillation frequency are controlled by a microcomputer with a timing function and built-in power failure protection, which can automatically resume operation after power is restored.
3. The unique workshop air duct provides gentle circulation for good temperature uniformity. The large observation window allows for convenient observation of samples and easy opening and closing.
4. Speed control is achieved through intelligent feedback control of a DC brushless motor, ensuring high speed accuracy. The slow start design prevents sudden spattering of the shake flask liquid and allows for adjustable start speed, effectively ensuring the accuracy of quantitative experiments.

3. Technical Parameters

Model		CTSI-050-001	CTSI-070-001
Shaking Mode		Cyclotron Oscillation	
Function	Amplitude	Φ20mm	
	Temp.Resolution	0.1℃	
	Temp. Motion	±0.1℃	
	Temp.Uniformity	±1℃	
	Temp. Range	RT+5 ~ 65 ℃	4 ~ 65 ℃ (maximum room temperature: 25 ℃)
	Rotary Speed	30 ~ 300rpm	30 ~ 300rpm
	Rotary Speed Precision	±1rpm	
Structure	Chamber Material	Mirror Stainless Steel	
	Outer Shell	ABS	
	Observation Window Material	Imported resin	
	Thermal Insulation Material	Polyurethane	
	Cooling System	No	Yes
	Coolant	No	R134a
	Heater	Stainless steel heating tube	
	Drive Mode	Three-axis level	
	Oscillating Plate	Spring Wire Rack	
	Air Circulation Mode	Horizontal convection	
	Power Rating	0.6kW	0.8kW
Controller	Temp. Control Mode	LCD PID intelligent control	
	Cyclotron Control Mode	Automatic changes of rotation direction	
	Setting Mode	Touch button setting	
	Temp. Display Mode	LCD display	
	Speed Display Mode		
	Timer	0 ~ 9999min	
	Temperature Sensor	Pt100	
	Speed Sensor	Hoare	
	Gating System	Yes	
Specification	Inner Chamber Size (W*L*H) (mm)	455*380*290	560*390*320
	Exterior Size (W*L*H) (mm)	500*640*480	600*770*500
	Packing Size (W*L*H) (mm)	550*690*530	940*780*655
	Shelf Size （mm）	380*320	480*315
	Max. capacity of Shelf for single specification(ml/pc)	100ml*16/250*9/500*5/ 1000ml*4	100ml*24/250ml*12/ 500ml*8/1000ml*6
	Inside Volume	50L	70L
	Shelf Load Bearing	≤10kg/layer	≤15kg/layer
	Shelf Layer	1	
	Power Supply （50/60Hz） Current Rating	AC220V/2.5A	AC220V/3.5A
	NW/GW (kg)	25/35	65/85

4. Operation and Display Instructions

Shift key: Press the left arrow and click "Select" to move to the left. Press "Return" to go back to the main menu.

Decrease key: Press the down arrow to decrease the parameter value by one number. Holding down this key will continuously decrease the parameter value.

Increase key: Press the upward arrow to increase the parameter value by one number. Holding down this key will continuously increase the parameter value.

Time function key: Press the clock symbol to enter the timing parameter setting state. Press "Enter" until it returns to the normal interface.

Temperature function key: Press the thermometer symbol to enter the temperature parameter setting state. Then click "Return" to go back to the normal interface.

Speed function key: Press the circle with arrowhead symbol to enter the speed parameter setting state. Then press "Back" to return to the normal interface.

Bactericidal function key: Press and hold the purple symbol with the light for 3 seconds to turn on the sterilization lamp. Press and hold for another 3 seconds to turn off the sterilization lamp.

Lighting function key: Press the bulb symbol to turn on or off the light.

Operation start/stop key: Press this key to start or stop the device.

1. Temperature Internal Parameters Setting

Note: All internal parameters have been adjusted during factory testing. It is forbidden to modify them except for the sensor correction parameter.

Press the "temperature" key for about 3 seconds. The temperature display area will show the password prompt "Lc," and the speed display area will show the password value.
Use the add, reduce, and shift keys to modify the password value to the required value. Then press the "temperature" key. If the password value is incorrect, the controller will automatically return to the normal display state. If the password value is correct, enter the temperature internal parameter setting state and press the "temperature" key to modify each parameter in turn. After modification, press the "temperature" button for 3 seconds to exit the internal parameter setting state, and the parameter values will be automatically saved.

Internal Parameter Table -1

Parameter Indication	Parameter Name	Parameter Function Description	(Range) Factory Value
Lc	Password	The password to modify this parameter in this table is "Lc=3".	0
AL-	Upper deviation over temperature alarm	If the "temperature measurement > temperature setting value +AL", the alarm light turns on, the buzzer sounds, and the heating output disconnects.	(0～20.0℃) 5.0
Ct-	Compressor start delay	The compressor start delay protection time is the minimum time interval from compressor stop to restart.	(0～600s) 180
uP-	Compressor start threshold	When the compressor works intermittently, If the "temperature measurement value ≥ temperature set value + uP" and the compressor start delay time is up, the compressor starts. Note: This parameter is valid only in the manual start and stop compressor mode and is invalid in the automatic mode.	(-10.0～10.0℃) 0.4
dn-	Compressor closing the threshold	When the compressor works intermittently, Turn off the compressor if "temperature measurement value ≤ temperature set value + dn". Note: This parameter is valid only in the manual start and stop compressor mode and is invalid in the automatic mode.	(-10.0～(**uP-0.1**)) 0.2
Lt-	Floodlight off-delay	The light turns on and automatically turns off after the time delay Lt. "Lt=0", the delay is invalid, and the lights must be turned off manually.	(0～9999min) 0
St-	Sterilizing lamp off-delay	The sterilization lamp turns on, and automatically turns off after the time delay St. "St=0", the delay is invalid, and the lamp must be manually closed.	(0～9999min) 0
T-	Control cycle	Heating control cycle.	(1～60s) 5
P-	Proportional band	Time proportional adjustment.	(0.1～50.0) 15.0
I-	Integration time	Integral function adjustment.	(1～2000s) 380
d-	Differential time	Differential action regulation.	(0～2000s) 100
Pb-	Zero adjustment	Correction of errors caused by sensor (low temperature) measurement. Pb = actual temperature value - instrument measurement value	(-99.9～99.9℃) 0
PK-	Full degree adjustment	Correction of errors caused by sensor (high temperature) measurement. PK = 1000 * (actual temperature value - meter measurement value) / meter measurement value	(-999～999) 0

Internal Parameter Table -2

Parameter Indication	Parameter Name	Parameter Function Description	Factory Value
Lc	Password	When “Lc=9”, the parameter values can be viewed and modified.	0
rES	Power down memory function	**0** : No power down memory function. **1** : Power-down memory function.	(0～1) 0
FAn	Fan type selection	**0** : The fan is a short-axis fan. **1** : Fan is a long-shaft fan.	(0～1) 0
ndc	Compressor operation mode	0: The compressor works intermittently. 1: The compressor works according to the CP value (see below), which determines if the work of the compressor is balanced or intermittent. 2: The compressor works according to the Htd value (see below), which determines if the work of the compressor is balanced or intermittent.	(0～2) 0
CP-	Compressor working mode fixed switching point	When "ndc=1", If the "temperature set value ≥ CP", the compressor works in an intermittently, and vice versa.	(0～100.0℃) 30.0
Htd	Compressor working mode automatic switching point	When "ndc=2": If the "temperature set value ≥ ambient temperature + Htd", the compressor works intermittently, and vice versa.	(-50.0～50.0℃) 0.0
Crc	Compressor start and stop mode	When the compressor is working intermittently: 0: The compressor starts and stops automatically according to the ambient temperature and set value. 1: The compressor starts and stops manually according to the values of uP and dn in internal parameter table-1.	(0～1) 0
Cnp	Prohibit compressor working temperature point	When "temperature set value ≥ Cnp", the compressor is prohibited from working. Note: This mode of operation has the highest priority, that is, the controller executes this command first and then judges the balanced or intermittent operation of the compressor.	(0～100.0℃) 42.0
nP-	Maximum power output	The maximum power percentage of the heating output.	(0～100%) 100
Co-	Turn off the heating output deviation	When the "temperature measurement value ≥ temperature set value + Co", the heating output is turned off.	(0.0～20.0℃) 5.0
SPL	Lower temperature setting	Lower limit of temperature set point.	(-50.0～100.0℃) 0.0
SPH	Upper temperature limit	Upper limit of temperature set point.	(SPL～100.0℃) 60.0
Adr	Mailing address	The local communication address.	(1～16) 1

Internal Parameter Table -3

Parameter Indication	Parameter Name	Parameter Function Description	Factory Value
Lc	Password	The ambient temperature can be viewed when "Lc=18".	
Ht	Ambient temperature	The ambient temperature at which the controller is located.	

2. Temperature Internal Parameters Setting

Press and hold the “Speed” button for about 3 seconds. The temperature display area will display the password prompt “Lc”, and the speed display area will display the password value. You can change the password value to the required password by using the add key, decrease key, and shift key. Then, click the “Speed” button. If the password value is incorrect, the controller will automatically return to the normal display state. If the password value is correct, it will enter the speed internal parameter setting state, and then click the “Speed” button to modify each parameter in turn. After modification, press and hold the “Speed” button for 3 seconds to exit the speed internal parameter setting state, and the parameter value will be automatically saved.

Note: Note: Modifying the speed parameter during the controller's operation is forbidden. If it needs to be modified, please stop the controller and then make the necessary modifications.

Speed – Internal Parameter Table (1)

Parameter Indication	Parameter Name	Parameter Function Description	Factory Value
Lc	Password	The parameter value can be viewed and modified when "Lc=3".	0
Pd-	Proportional gain	Speed proportional gain.	(1～100) 10
Id-	Integral coefficient	Speed integral coefficient.	(1～100) 5
InT	Acceleration time	The time it takes for the motor to accelerate to the new setpoint.	(1～60) 10
dET	Deceleration time	The time it takes for the motor to decelerate to the new setpoint.	(1～60) 10
SdL	Speed setting lower limit	Minimum value of speed setpoint.	(20～6000) 20
SdH	Speed setting upper limit	Maximum speed setting.	(SdL～6000) 600

Speed – Internal Parameter Table (2)

Parameter Indication	Parameter Name	Parameter Function Description	Factory Value
Lc-	Password	The parameter value can be viewed and modified when "Lc=9".	0
EAr	Gear ratio	Big gear diameter / pinion diameter.	(1.0～10.0) 3.2
PoL	Motor pole number	DC brushless motor pole pairs.	(1～32) 4
dIF	Motor rotation Reference direction	dIF=0: Specifies that the clockwise direction of rotation is positive. dIF=1: Specifies that the counterclockwise direction of rotation is positive.	(0～1) 0
FdS	Speed feedback value	Speed feedback coefficient value.	(0.1～10.0) 1.0
FdC	Current feedback value	Current feedback system value.	(0.1～10.0) 1.0
FrE	Carrier frequency	Brushless motor carrier frequency, Note: When the carrier frequency is changed, the controller needs to be restarted.	(5～15) 15
Po-	Motor power	Brushless motor power, Note: This parameter must be adjusted according to the actual power of the motor.	(1～400) Low voltage driver: 80 High voltage driver: 200
CL-	Overflow multiple	Allowable current multiplier for overcurrent protection of motor.	(1.0～10.0) 5.0
Fr-	Rotation direction selection of motor	0: The motor only runs in forward rotation. 1: The motor only runs in reverse. 2: The motor can run in reverse direction.	(0～2) 0
db-	Insensitive display area	Speed display insensitive area.	(0～100) 2
dF-	False display interval point	When the speed set value ≥ dF, both the speed set value and the speed display value are false display values.	(0～6000) 6000

3. Temperature Internal Parameters Setting

1. When Fr is set to "0" or "1" in "Speed - Internal Parameter Table (2)", the direction of rotation can only be forward or reverse. Press the "Time" button to make the number on the right side of the time display area flash. Use the "◀" shift button, "▼" decrease button, and "▲" increase button to set the running time. Press the "Time" button again to return to the work interface, and the time display area will show the set total timing time. The number will decrease as the running time progresses, and the integer part will stop when it reaches zero. Finally, the buzzer will sound, and pressing any key will stop the buzzer.

2. When Fr is set to "2" in "Speed - Internal Parameter Table (2)", there is a positive and negative function. Click the "Time" button to enter the total timing setting state, and the time display area will start flashing. You can use the '◀' shift key, '▼' decrease key, and '▲' increase key to modify the desired set value. Then click the “Time” button to enter the forward rotation time (the prompt Fd is displayed on the right) setting status, and modify the desired setting value by shifting, reducing, increasing, etc. Next, click the “Time” button to enter the stop timing time (the right display prompt p-) setting status, and modify it to the desired setting value. Then, click the “Time” button again to enter the reverse timing time (the right display prompt Rd) setting state, and also modify it to the desired setting value. Finally, click the “Time” button to return to the normal display state, and the time setting will be completed.
Note: The total time can be set in minutes or hours; the forward, stop, and reverse timings are in minutes.

3. Press and hold the "Time" button for about 3 seconds. The temperature display area will show the password prompt "Lc", and the password value can be modified to the required value using the increase, decrease, and shift keys in the speed display area. Then, click the "Time" button. If the password value is incorrect, the controller will automatically return to the normal display state. If the password value is correct, it will enter the time internal parameter setting state, and each parameter can be modified in turn by clicking the "Time" button. To exit this state, press and hold the "Time" button for 3 seconds, and the parameter values will be automatically saved.

Time – Internal Parameter Table

Parameter Indication	Parameter Name	Parameter Function Description	(Range) Factory Value
Lc-	Password	The parameter values can be viewed and modified when "Lc=3".	0
ndt	Timing mode selection	0: Start timing after running. Running time is up, only stop speed, not temperature. 1: Start timing after running. Run time arrives, stop speed and temperature simultaneously. 2: The temperature starts to count after reaching the set value. Running time is up, only stop speed, not temperature. 3: When the temperature reaches the set value, timing starts. Running time arrives, and speed and temperature are stopped simultaneously. When the timing starts, "m" or "h" flashes. After the time is over, the time display area shows "End". Note: This parameter is must not be modified during operation.	(0～3) 1
Hn-	Total timing Timing mode	0: Timing is measured in minutes. 1: Timing is measured in hours. Note: This parameter is must not be modified during operation.	(0～1) 0
rT-	Total timing Time correction	Correct the total timing error using the following formula: Correction value = [(run time in seconds - actual time in seconds) * 10] / (actual time in minutes)	(-999～999) 0

4. Button and Operation Instructions

1. Power on: Turn on the power, and the controller will power on. The temperature display window will display "HY-2," the speed display window will display "8888," and the time display window will display "8888." All the indicators will light up, and after about 3 seconds, it will enter the normal display status.

2. Temperature: Press the "Temperature" button, and the number on the right side of the temperature display area will flash. Use the "◀" shift button, "▼" decrease button, and "▲" increase button to set the desired temperature. Then press the "Temperature" button again to exit the temperature setting state. The set temperature value will be automatically saved, and the instrument will operate according to this temperature value.

3. Speed: Press the "Speed" button, and the number on the right side of the speed display area will flash. Use the "◀" shift button, "▼" decrease button, and "▲" increase button to set the required speed. Then press the "Speed" button again to exit the speed setting state. The set speed value will be automatically saved, and the instrument will run at this speed value.

4. Time: If the total timing function is set to "0", it means that there is no timing function and the equipment runs continuously. The timing function is set by referring to the description in item 8 above.

5. Sterilization: When "St=0", press and hold the "Sterilization" button for 3 seconds, the identifier "STERILIZE" under the interface lights up, the UV lamp is turned on, and the device enters sterilization operation. Press the "Sterilization" button again within 3 seconds, the identifier "STERILIZE" goes out and sterilization stops. The sterilization lamp off delay setting is set by referring to the description in "Temperature - Internal Parameter Table (1)".

6. Operation control: Press the "Run/Stop" button, the identifier "RUN" at the lower right of the interface lights up and the equipment starts to rotate; press the "Run/Stop" button again, the identifier "STOP" at the bottom right of the interface lights up, and the equipment stops rotating.

7. Gating: During operation, if the door is opened, the interface identifier "OPEN" lights up, the equipment stops rotating, and when the door is closed, the identifier "OPEN" goes out and the equipment continues to rotate.

8. Lighting: When "Lt=0", click the "Lighting" button to turn the light on and off. The illumination off delay setting is set by referring to the description in "Temperature - Internal Parameter Table (1)".

5. Function Setting Description

1. Timing Function
When the total timing time is set to "0", it means that there is no timing function, and the device runs continuously. When the total timing time is not "0", the timer starts according to the selected timing mode. The letter "m" (for minutes) or "h" (for hours) will flash, and the motor will stop when the timer ends. The time display area will show "End," and the buzzer will sound. Click the "Start/Stop" button to restart the operation.

Note:
1) If the set value of the timing time is changed during operation, the controller will restart the timer according to the new set time.
2) The timing mode can be selected by modifying the "ndt" value in the "Time - Internal Parameter Table".
3) The timing mode can also be selected by modifying the "Hn" value in the "Time - Internal Parameter Table".

2. Refrigeration Function
The working mode of the compressor can be selected (intermittent, balanced, or disconnected), and the compressor can be started manually or automatically during intermittent operation. For specific settings, please refer to parameters such as "ndc," "CP," "Htd," "Crc," and "Cnp" in "Temperature - Internal Parameter Table (2)".

3. Power failure memory function
You can select whether to have a power-down memory function by modifying the value of “rES” in “Temperature-Internal Parameter Table (2)”.

1) Without power-down memory function (rES=0): the controller is powered off after a power failure, and the speed stops.
2) With power-down memory function (rES=1): the controller is powered off after a power failure, and the speed remains in the last state before the power failure.

6. Alarm and Shutdown

1. When there is a power module failure (Er-1), Er-2, Holzer error (Er-3), busbar undervoltage (Er-4), busbar overvoltage (Er-5), or communication fault (Er-6), the identifier "ALM2" will light up, and the controller will automatically stop with the buzzer sounding. Please turn off the power when the fault occurs, carefully check the wiring of the motor, and make sure it is correct before turning on the power again.
2. When an over-temperature alarm occurs, the buzzer will sound, and the "ALM1" identifier will light up. If an over-temperature alarm occurs due to changing the temperature set value, the "alarm" light will be on, but the buzzer will not sound.
3. When the buzzer sounds, you can press any key to stop it.
4. If no key is pressed within 1 minute in the setting state, the controller will automatically return to the normal display state.
5. If the display window of the controller shows "-" to indicate the fault of the temperature sensor or the controller itself, please carefully check the temperature sensor and its wiring.
6. When turning off the machine, press the "run/stop" button to stop rotation, then turn off the power switch on the right side of the instrument, and turn off the whole machine.

5. Wiring Diagram

CTSI-050-001 Wiring Diagram

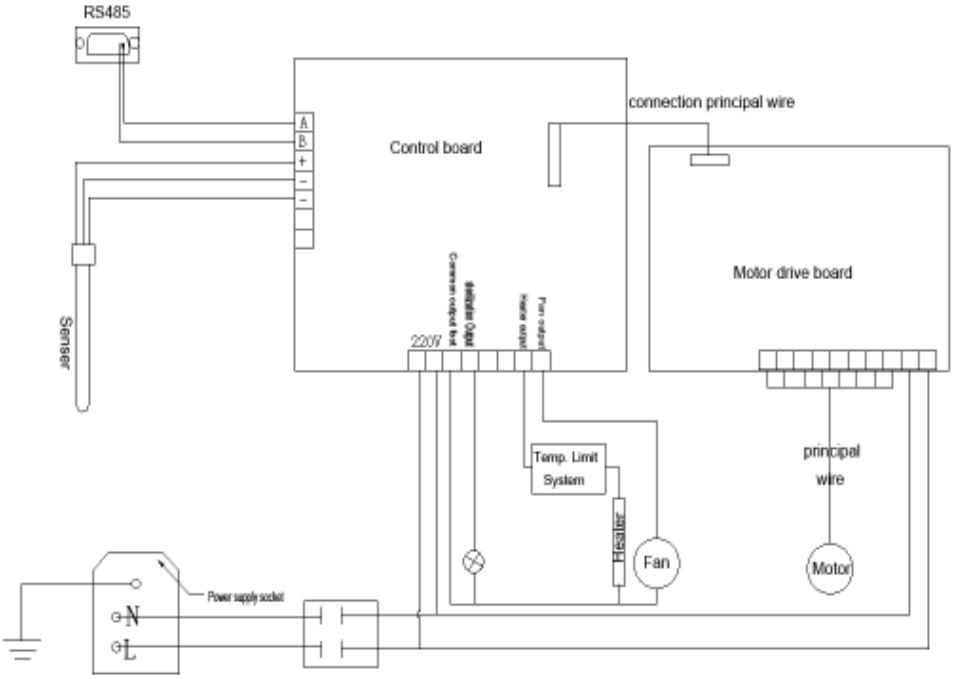

CTSI-070-001 Wiring Diagram

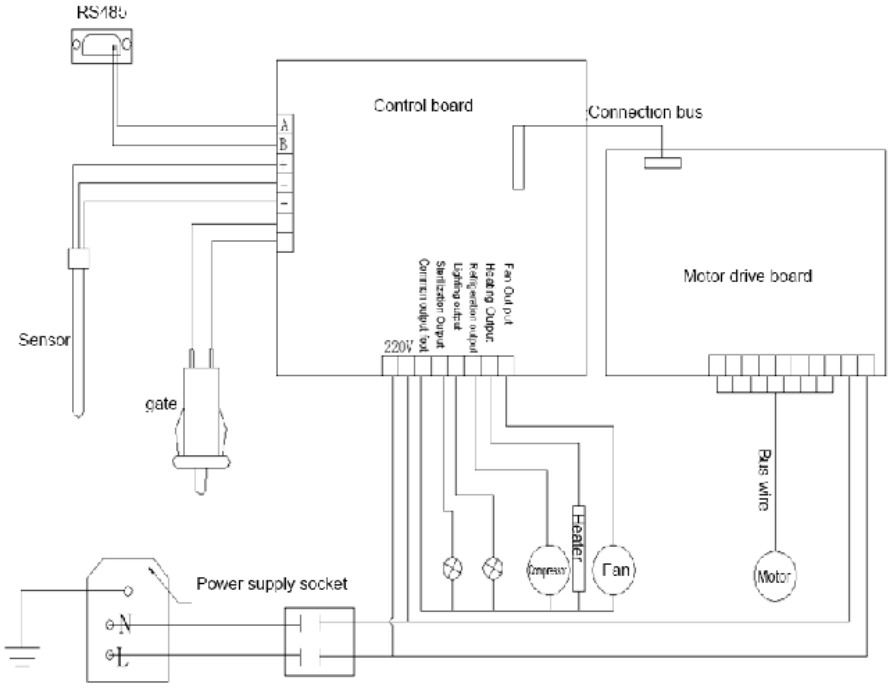

6. General Fault and Troubleshooting

Failure Phenomenon	Fault Analysis	Troubleshooting
Equipment is ON but the display is not	Power supply is not connected.	Check if the power outlet has power.
	The power plug is not plugged in.	Check the contact between the power plug and the socket.
	The power switch is not on.	Turn on the power switch on the right side of the instrument.
	Damage of the fuse on the Box.	Replacement of a power fuse with the same specification.
Rolling plate does not rotate	Door switch does not work.	Check if the door is closed or not.
	The bottom of the rolling plate is stuck with an object.	Remove the object.
	Belt damage.	Notify the factory to get the belt replaced.
	Control circuit fault.	Notify the factory to get it repaired.
Instability of the rolling plate	The instrument is not stable.	Adjust the foot of the instrument to stabilize it.
	External object at the bottom of the plate.	Remove the object.
	Control circuit fault.	Notify the factory to get it repaired.
The measured temperature is higher than the set temperature or the system enters the high temperature alarm state	The door is not properly closed.	Close the door properly.
	The instrument has not yet entered the state of constant temperature.	Wait for a moment and check again.
	Damage of the circulating fan.	Notify the factory to get the fan replaced.
	Failure of the refrigeration system.	Notify the factory to get it repaired.
The noise of the instrument is too loud	The instrument is not placed properly.	Adjust the foot of the instrument to stabilize the instrument.
	Flask clamp fixing screw is loose.	Remove the flask and the plate and tighten the screw.
	Shake plate loosening.	Tighten the screws at the four corners of the plate.
	Bump on the bottom of the plate due to an object.	Remove the object.
	Mechanical failure.	Notify the factory to get it repaired.

7. Accesories

The incubators INC-S (CTSI-050-001 and CTSI-070-001) include a tray with removable metal springs. This tray can be removed to use the optional trays CTSI-A00-001 (for CTSI-050-001) and CTSI-A01-001 (for CTSI-070-001) along with the corresponding fixing clips CTSI-A02-001, CTSI-A03-001, CTSI-A04-001 and CTSI-A05-001.

These are the quantities of clips that can be installed on each type of tray:

	Optional tray for the 50 L incubator (CTSI-A00-001)	Optional tray for the 70 L incubator (CTSI-A01-001)
100 ml clips (CTSI-A02-001)	Max. 16 clips	Max. 24 clips
250 ml clips (CTSI-A03-001)	Max. 9 clips	Max. 12 clips
500 ml clips (CTSI-A04-001)	Max. 5 clips	Max. 6 clips
1000 ml clips (CTSI-A05-001)	Max. 4 clips	Max. 6 clips

Nota importante para los aparatos electrónicos vendidos en España

Instrucciones sobre la protección del medio ambiente y la eliminación de aparatos electrónicos:



Los aparatos eléctricos y electrónicos marcados con este símbolo no pueden ser eliminados en forma de residuos urbanos.

De conformidad con la Directiva 2012/19/UE, los usuarios de la Unión Europea de aparatos eléctricos y electrónicos, tienen la posibilidad de devolver sus RAEE para su eliminación al distribuidor o fabricante del equipo después de la compra de uno nuevo. La eliminación ilegal de aparatos eléctricos y electrónicos es castigada con multa administrativa.

Remarque importante pour les appareils électroniques vendus en France

Informations sur la protection du milieu environnemental et élimination des déchets électroniques :



Les appareils électriques et électroniques portant ce symbole ne peuvent pas être jetés dans les décharges.
En réponse à la règlementation, Labbox remplit ses obligations relatives à la fin de vie des équipements électriques de laboratoire qu'il met sur le marché en finançant la filière de recyclage de ecosystem dédiée aux DEEE Pro qui les reprend gratuitement (plus d'informations sur www.ecosystem.eco).
L'élimination illégale d'appareils électriques et électroniques est punie d'amende administrative.

Nota importante per le apparecchiature elettroniche vendute in Italia

Istruzioni sulla protezione ambientale e sullo smaltimento dei dispositivi elettronici:



Le apparecchiature elettriche ed elettroniche contrassegnate con questo simbolo non possono essere smaltite come rifiuti urbani.
In conformità con la Direttiva 2012/19 / UE, gli utenti dell'Unione Europea di apparecchiature elettriche ed elettroniche hanno la possibilità di restituire i propri RAEE per lo smaltimento al distributore o al produttore di apparecchiature dopo averne acquistato uno nuovo. La rimozione illegale di apparecchiature elettriche ed elettroniche è punibile con una sanzione amministrativa.

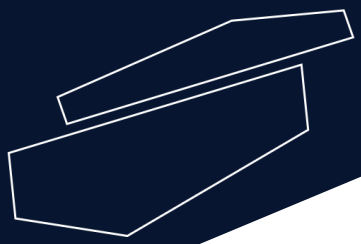

www.letslab.com