Thermal Control

PCR Thermo Cycler (TC1000-G/TC1000-S) user manual

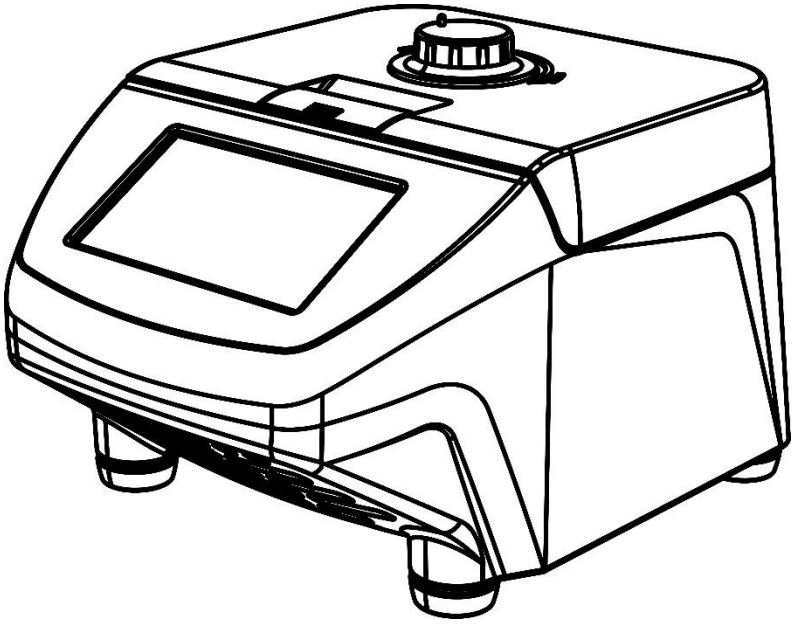

12301973

Ver.20220110

CONTENTS

COPYRIGHT 1

SAFETY NOTICE 2

Common safe type cautions 2

1. INTRODUCTION 6

1.1. Intended use 6

1.2. Specifications 6

2. DECLARATION OF CONFORMITY 8

3. REQUIRED OPERATIONAL CONDITION 10

3.1. Basic Operational Conditions 10

3.2. Transport and storage condition 10

4. INSTALLATION 11

4.1. Location 11

4.2. Connection of the power cord and grounding 11

5. STRUCTURE 12

5.1. Installing the thermo block 14

5.2. Initial steps 15

5.3. Power on 16

5.4. Heated lid 16

6. OPERATION MANUAL 19

6.1. File Management 19

6.2. Quick Operation 29

6.3. System setting 29

7. TROUBLE SHOOTING 31

COPYRIGHT

No part of this manual may be reproduced or transmitted without prior written permission of original manufacturer.

The contents of this document are subject to change without notice.

SAFETY NOTICE

Common safe type cautions

Carefully read the following safety precautions for a thorough understanding.

- Follow the instructions and procedures described in this manual to operate this instrument safely.
- Carefully read all safety messages in this manual and the safety instructions on the instrument.
- Safety messages are labeled as indicated below. They are in combination with signal words of “WARNING” and “CAUTION” with the safety alert symbol  to call your attention to items or operations that could be dangerous to you or other persons using this instrument. The definitions of signal words are as follows:

	**WARNING: Personal Danger** Warning notes indicate any condition or practice, which if not strictly observed, could result in personal injury or possible death.

	**CAUTION: Possible damage to instrument** Caution notes indicate any condition or practice, which if not strictly observed or remedied, could result in damage or destruction of the instrument.

NOTE： Notes indicate an area or subject of special merit, emphasizing either the function of the product or common errors in operation or maintenance.

- Do not operate this instrument in any manner not described in this manual. When encounter trouble with this instrument, ASK FOR HELP from original manufacturer or authorized distributors.
- The precautions described in this manual are carefully developed in an attempt to cover all the possible risks. However, it is also important that you are alert for unexpected incidents. Please operate with care.

	**WARNING:** ● This instrument is not explosion-proof. Never use explosive or flammable samples. ● Do not install the instrument in or near places where inflammable gases are generated, or chemicals are stored. ● Do not place dangerous material within 30cm around the

	instrument. ● Make sure to prepare necessary safety measures before using samples that are toxic, radioactive or contaminated with pathogenic micro-organisms at your own responsibility. ● If the instrument, rotor and/or accessories that has been contaminated by solutions with toxic, radioactive or pathogenic materials, clean it according to the decontamination procedure accordingly. ● If you require services at site, please sterilize and decontaminate it in advance, and then describe the details of the hazardous substance to the service center involved in. ● Do not handle the power cord or turn on or off the POWER switch with wet hands to void electrical shocks. ● Do not repair, disassemble the instrument or carry out other maintenance without proper authorization. Please contact the service center of the manufacturer or nearest distributor if you need such service. ● Do not operate the product in any manner not described in this User Manual. ● This product contains heating components, please avoid scalding injury.

	**CAUTION: Possible damage to instrument** ● This instrument must be located on solid and level workbench top for indoor use. ● Ensure the distance with the surrounding and the air circulation of the vent. ● When close the cover, do not put your hands between the upper cover and the casing, preventing the pinch. ● Do not move or relocate the product when it is running. ● If fluid spills out, please promptly clean and dry with a dry cloth to avoid sample contamination. ● When the experimental operation, keep the machine cover open, or arbitrary open the cover will affect the experiment results. ● When the experimental operation, the sudden loss of power will affect the results. ● When in doubt or have any troubles with this product, ASK FOR HELP. ● Vibrations are likely to damage the product, contact our service center if abnormality observed.

1. INTRODUCTION

1.1. Intended use

PCR Thermo cycler is widely used in biology, medicine, food industry, forensic science, biotechnology, environmental science, microbiology, clinical diagnosis, epidemiology, genetics, gene chips, genetic testing, gene cloning, and other fields that need gene expression instrument. Operator should be trained before using the product. Detailed operation, please refer to the User Manual below.

1.2. Specifications

Specifications	TC1000-G	TC1000-S
Sample Capacity	0.2ml PCR tubes×96, 8×12PCR plate or 96well plate ×1	
Heating Temperature Range [℃]	4~105℃	
Lid Temperature Range [℃]	30~110℃	
Temperature Display Accuracy [℃]	0.1℃	
Temperature Accuracy [℃@55℃]	±0.3℃	
Temperature Uniformity [℃@55℃]	< 0.3℃	
Max. Heating/Cooling Rate [℃ /sec]	5℃/Sec	

Gradient Temperature Setting Range	30~99℃	--
Gradient Range	1~42℃	--
Display	7”800×480mm LCD	
Touch Operation	Yes	
Power-off Protection	Yes	
Power Supply	AC 220V（±10 ）50/60Hz; AC 110V（±10 ）50/60Hz	
Dimension[W×D×H]	280×270×250mm	
Weight	11kg	

2. DECLARATION OF CONFORMITY

In compliance with the following safety standards:
EN 61010-1
EN 61010-2-020
EN 61010-2-101
In compliance with the following EMC standards:
EN 61326-1/FCCPart15Subpart B/ IECS 001
EN 61326-2-6:2006
Associated EU guidelines:
EMCguidelines:2004/108/EC
LVD guidelines: 2006/95/EC
This ISM device complies with Canadian ICES-001. Cet appareil ISM est conforme à la norme NMB-001 du Canada.

Changes or modifications not expressly approved by the party responsible for compliance could void the user's authorization granted by the manufacturer to operate the equipment.

NOTE: This instrument has been tested and found to comply with the limits for a Class A digital device, pursuant to Part 15 of the FCC Rules. These limits are

designed to provide reasonable protection against harmful interference when the instrument is operated in a commercial environment. The instrument generates, uses, and can radiate radio frequency energy and, if not installed and used in accordance with the user manual, may cause harmful interference to radio communications. Operation of instrument in a residential area is likely to cause harmful interference in which case the user will be required to correct the interference at his or her own expense.

3. REQUIRED OPERATIONAL CONDITION

3.1. Basic Operational Conditions

- Power: 200V-240V, 50Hz/60Hz.
- Ambient temperature: 10℃ ~ 30℃.
- Relative humidity: ≤70%.
- No vibration and airflow around.
- No airborne dust with charge, explosive and corrosive gases around.

3.2. Transport and storage condition

- Storage temperature: -20℃ ~ 55℃.
- Relative humidity: ≤80%.

4. INSTALLATION

This section describes the instructions that you should abide when install the instrument to ensure your safety and the optimum performance.

	**WARNING:** ● Improper power supply may damage instrument. ● Make sure the power source conforms to the requirement before connecting.

4.1. Location

- Place the instrument on a firm, flat and level bench top, ensure the four feet of this instrument stand on the table firmly. Avoid slippery surface or surface prone to vibration.
- The recommended ambient temperature is 20℃±5℃. Avoid temperature over 30 ℃ or direct exposure to sunlight.
- Keep clear of the instrument at least 10 cm on both sides and at least 30 cm behind it to guarantee the cooling efficiency.
- Keep away from heat source or liquid.

4.2. Connection of the power cord and grounding

	**WARNING:** ● To avoid electrical shocks, ensure your hands are dry when touching the power cord. ● This instrument must be grounded properly.

A power outlet rated for 10A or above, with proper earth protection and in compliance with municipal safety requirements is compulsory.

5. STRUCTURE

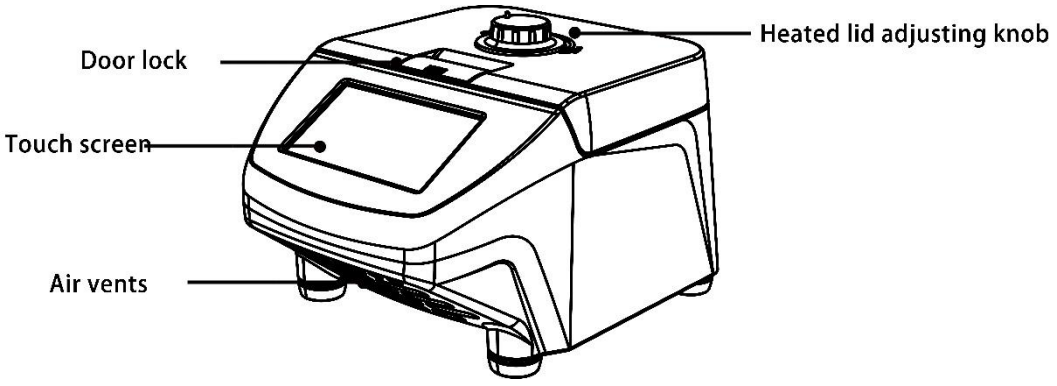

Figure 5-1 Front view of the instrument

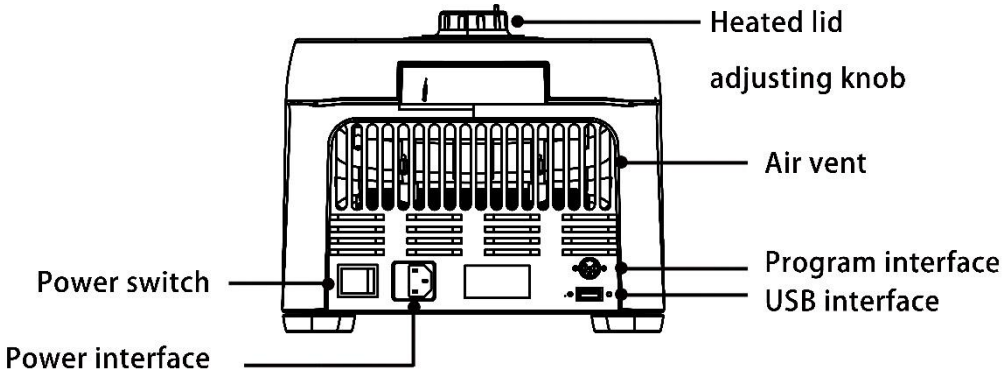

Figure 5-2 Back view of the instrument

Heated lid adjusting knob: Adjust the height of heated lid to accommodate different reaction tubes.

LCD touch screen: Parameters setting and display

Door lock: Open or lock the cover

Air vents: Ventilation

Power switch: Turn on /off the power

Power interface: Connect the power cord

Program Interface: For service

USB Interface: For service

5.1. Installing the thermo block

Before power on, please make sure the thermo block has been installed correctly.

Installing methods: Put the thermo block vertically into the main unit and ensure good contact between the Thermo block and the main unit.

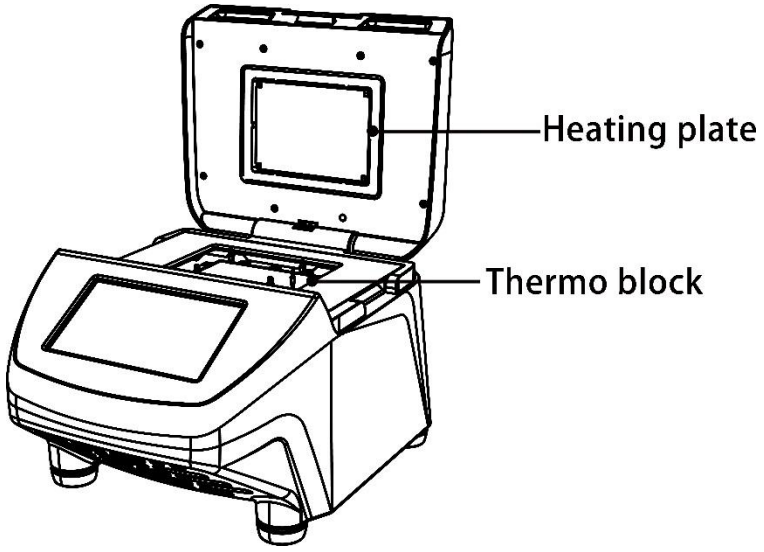

Heating plate: Heat for the heated lid

Thermo block: Load the sample tubes or a PCR plate

⚠	**CAUTION!** ● Risk of burns from the hot surface. ● Risk of burns form hot thermo block and hot heating plate when the heated lid is open.

5.2. Initial steps

Before the PCR thermo cycler is commissioned for the first time, ensure that the following requirements are met:

1) The device is correctly connected.
2) The device is free of damage.
3) Free circulation of air around the ventilation slots.

Before power on, please ensure:

1) The power supply is consistent with the instrument required voltage.
2) Make sure the power cord is securely plugged into a power outlet.
3) Power cord grounding reliable.

5.3. Power on

1) Turn on the power switch, the instrument will issue a "beep" sound, indicating that power is on.

2) The instrument starts a self-inspection which will takes about 1-2 minutes, please be patient.

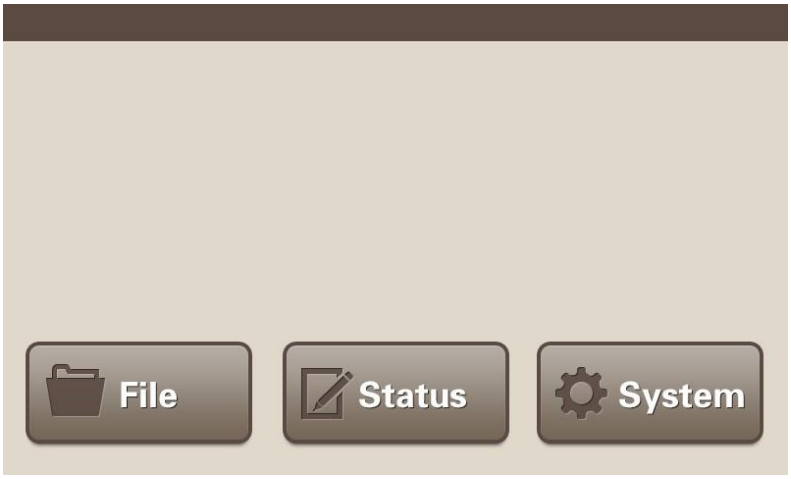

NOTE: When the self-inspection passed, “TEST pass!” will be shown on the display, you can go on next steps. If not, please turn off the power immediately and contact the manufacturer immediately.

5.4. Heated lid

NOTE:

1) Before close the heated lid, please make sure thermo block loaded with sample tubes or a PCR plate.

2) Before start the program, please make sure the heated lid is closed.

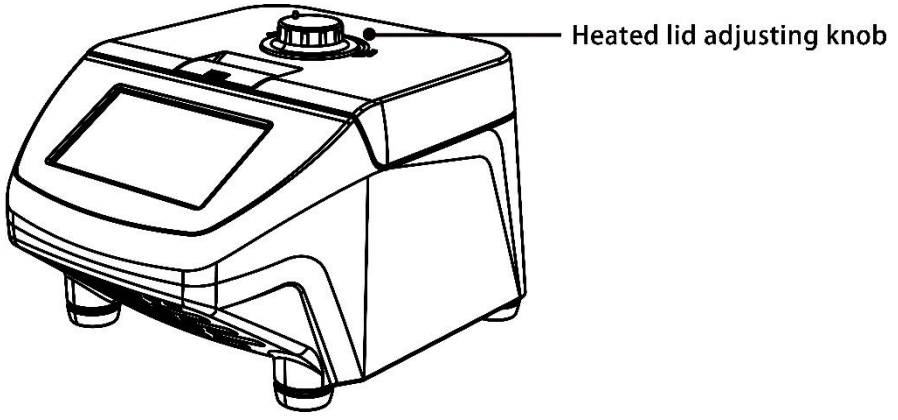

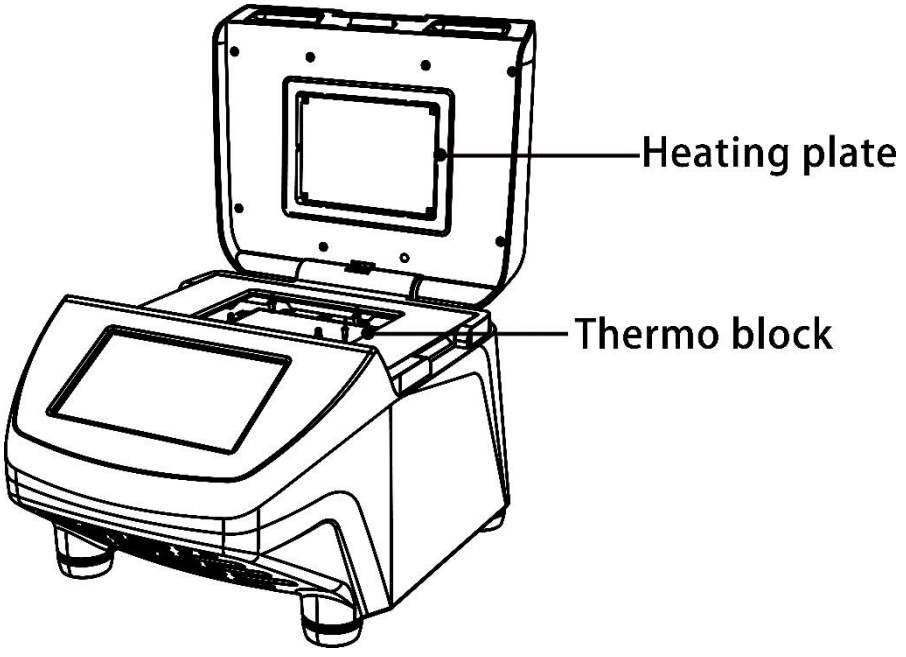

Heated lid adjusting knob: Adjust the height of heated lid to accommodate different reaction tubes. Rotate it clockwise, the heating plate will down, rotate it counterclockwise, the heating plate will be lift up.

	**CAUTION!** ● When you close the heated lid, do not place your fingers between the heated lid and the machine, which will cause a hand nipping.

6. OPERATION MANUAL

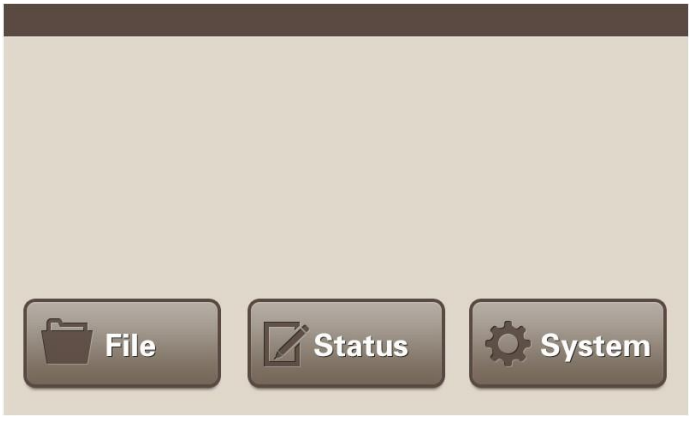

When successfully pass the self- inspection, you can:

1) Click “File” button to enter the file management interface to create e file, edit the file, run a program, etc.
2) Click “Status” button to enter program executing interface directly.
3) Click “System” button to enter the system setting interface.

6.1. File Management

Click “File” button, you can enter the interface below.



Open: Open a folder. Choose the target folder, click “Open” to open the folder.

New: Create a folder. Click “New”, input the file name through the keyboard, then press the Enter key.

Delete: Delete the folder. Select a folder, click the “Delete” button. Attention will pop up, you can select Yes to delete the folder. Otherwise, click the No button, cancel the delete order.

Save as: Save folder as a new name. Select the folder, click the “Save as” button, enter the new folder name through the pop-up keyboard, press the Enter key.

Back: Return to the main menu.

6.1.1. Create an experiment method

Select a folder (which will turn to blue color), click “Open” button, or double-click the folder， you can enter the interface below.



Run: Execute the program defined in the selected file. Open: Open the selected

file to edit the program.

New: Create a new file to define a new program. Delete: Delete the selected file. Save as: Rename the selected file.

Back: Return to up level interface. Home: Return to main menu.

NOTE: When you want to create or save a file, you need to do it in a selected folder. By clicking “New” or” Open” button, you can create a new file or edit a selected file.

1) Create a new file. Click “New” button, input the file name via the pop-up keyboard, press “Enter” key, the new file will be created. If you press “ESC” key, you can cancel the new file creation.
2) Edit a selected file. Select the target file, click “Open” button, and enter the program edit interface.

6.1.2. Program Settings



Back: Return to folder interface

Edit: Selecting the STEP which you want to do edit from area of blue block , then click the Edit button into the temperature setting interface

Run: Run the program (check part 6.1.6) Save: Save the program

Insert: Create a new STEP Delete: Delete the selected STEP

Arrow button: Scroll backward (left arrow)/forward (light arrow)

6.1.3. Temperature Settings (TC1000-S)



Input Parameters

Temp: The temperature of this STEP.

Time: The execution time for this STEP (0 ~ 99min59s).

Goto: Go to the STEP set in this program after the current STEP execution

complete Cycle: Set the times needed to repeat.

+Temp/c: Temperature modify value for each cycle, could be plus or minus

(range-4℃~4℃) For example, when the Temp L is 50℃, the Temp H is 60℃, if you set “0.1℃”in Temp/c at Item3, then every time, the program running to Item3, the Temp L and Temp H will both increase 0.1℃. After 30 cycles, the Temp L will reach to 53℃, and the Temp H will reach to 63℃.

+Time/c: Time modify value for each cycle, could be plus or minus(range -120~120s) For example, when the Time is 60s, if you set “1s”in Time/c at Item3, then every time, the program running to Item3, the Time will increase 1. After 30 cycles, the Item 3 running time will reach to 90s.

6.1.4. Temperature Settings (TC1000-G)

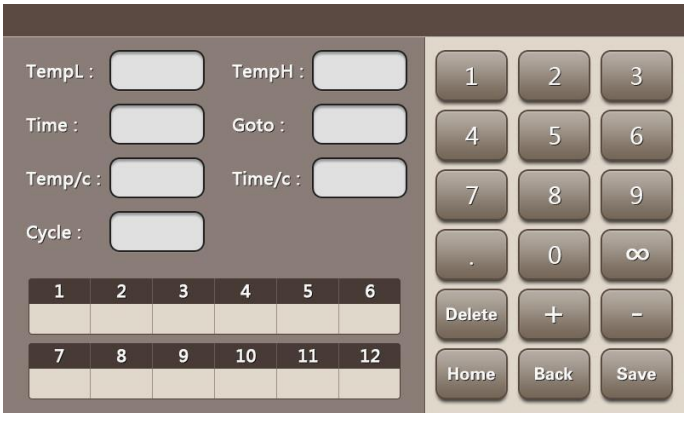

Input Parameters

Display each column temperature of Heating block

Temp L: Lowest temperature

Temp H: Highest temperature

Time: The execution time for this STEP (0 ~ 99min59s)

Goto: Go to the STEP set in this program after the current STEP execution

complete Cycle: Set the times needed to repeat.

+Temp/c: Temperature modify value for each cycle, could be plus or minus (range-9.9℃~+9.9℃) For example, when the Temp L is 50℃, the Temp H is 60℃, if you set “0.1℃”in Temp/c at Item3, then every time, the program running to Item3, the Temp L and Temp H will both increase 0.1℃. After 30 cycles, the Temp L will reach to 53℃, and the Temp H will reach to 63℃.

+Time/c: Time modify value for each cycle, could be plus or minus (range ±9 min 59 s) For example, when the Time is 60 s, if you set “1 s” in Time/c at Item 3, then every time, the program running to Item3, the Time will increase 1. After 30 cycles, the Item 3 running time will reach to 90 s.

Note: Gradient range: 30 ~ 99 ℃, gradient span: 1 ~ 42 ℃.

6.1.5. Configure setting



Heated lid: Close by default.

NOTE:

1) The heated lid setting range is 30-110℃. Please don't exceed the parameters setting range.
2) If click "off", the heated lid will close. But closing the heated lid will impact the experiment result.
3) When the block temperature is below 30 ℃, the headed lid will also close itself.

Control mode: default Block. In general, the block mode can meet the experimental needs.

Sample Volume: Please fill in the real reaction system according to the actual situation

Back: Return to up level interface

Home: Return to main menu.

6.1.6. Running Interface

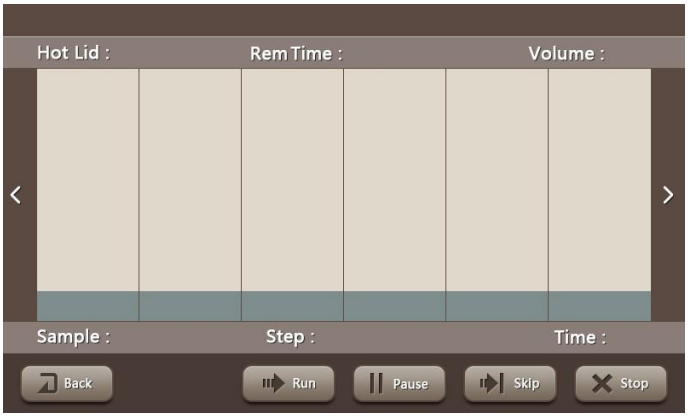

Hot Lid: Temperature of the heated lid

Rem Time: Remaining time of this program

Volume: Sample volume

Sample: Temperature of sample

Step: Current steps to run

Time: Running time

Run: Running

Pause: Pausing the program

Skip: Skipping the step which running

Stop: Stopping the program

Back: Return to up level interface

When the program is finished or being stopped, the instrument will issue two "beeps" sound, click the Back button can return to the main menu.

6.1.7. Normal PCR program setting

1) Initial denaturation: 95℃, 5 minutes: In column Item1, input 95 in “Temp”, input 0500 in “Time”, this STEP completes.

Input skills: Time is displayed in min: sec format. For example if you want 5 minute then input 0500, if you want 5 minutes 30 seconds then input 0530.

2) Denaturation 95℃: 30 seconds: Click “Add” button to create Item2. Input 95 in “Temp”, input 0030 in “Time”, this STEP completes.

3) Primer annealing: 55℃ 30 seconds： Click “Add” button to create Item3. Input 55 in “Temp”, input 0030 in “Time”, this STEP completes.

4) Extension 72℃ 30 seconds, from step2 to step4 repeat 30 times： Click “Add” button to create Item4. Input 72 in “Temp”, input 30 in “Time”, input 02 in “Goto”, input 30 in “Cycle”, this STEP completes. when step 4 was finished, it will go to step 2, then run 30 cycles .

5) Continue extension: 72℃ 10 minutes: Click “Add” button to create Item5. Input 72 in “Temp”, input 1000 in “Time”.This STEP completes.

6) Click Save.

After all the above STEPs, the Normal PCR program setting is completed. After 95℃ initial denaturation 5minutes, running (2)-(5) PCR cycles 30 times, at last continue extension at 72℃ in 10 minutes.

NOTE:

Because the instrument of different brands has its own temperature control features (including: heating and cooling speed, stability, volatility, etc), and the biological experiments are inherently uncertain, vulnerable to outside influence, so although a program can run successfully in one instrument, it does not mean you can get the same result in another instrument. Please adjust the program to suit different instruments in order to achieve the ideal state.

6.2. Quick Operation

Click “Status”, can enter the program running interface. The system default execute the last running program.

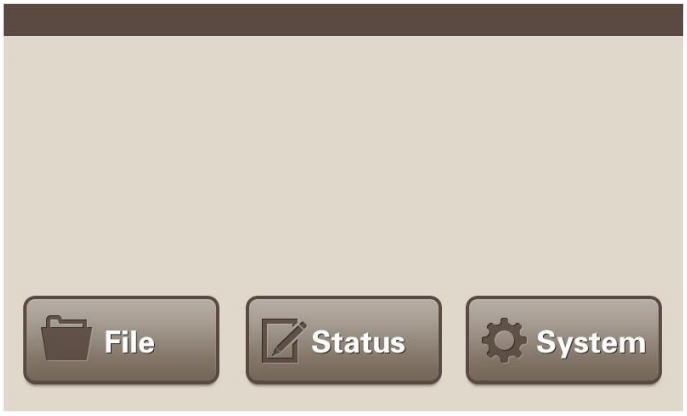

6.3. System setting

Click the “system” in the main menu, enter the system setting interface below.



SN： Serial number. Each product has its own SN number

Test Info： Show the information of the self-test

Auto Test： Self-test again. The item can be shown in the Test Info. When the

self-test passed, the TEST pass will be shown in the window.

Date: Can input or adjust the current data. Click it, enter the number in the keyboard. When you want to input 2019, April 2th, you just need to input 20190402.

Time： Can input or adjust the current time. Click it, enter the time in the keyboard. When you want to input 13:40:48, just input the number 134048

KEY Sound： Can open or close the key sound.

En/中： Switch font between Chinese and English.

Home: Return to main menu.

7. TROUBLE SHOOTING

	**CAUTION!** ● When Power on, if you find the phenomenon of abnormal sound, abnormal display, failure alerts, fail in self-test, etc, please turn off the power and contact the manufacturer immediately.

Index	Symptom	Cause	Measure
1	Instruments can't be power on	The power line is unplugged	Check whether the power line is unplugged Check whether the fuse is broken or loose.
		Others	Contact the manufacturer
2	Self-test, Connect -- error	The thermo block is not installed	Install the thermo block
		The thermo block is not contact well with the main unit.	Power off, Install the thermo block again, then power on.
		Others	Contact the manufacturer

3	Self-test, Sensor1, Sensor2, Sensor3--error	Thermo block sensor damaged or bad contacted	Power off, Install the thermo block again, then power on.
			Contact the manufacturer
4	Self-test, Fan Sensor--error	Heat sink damaged or bad contacted	Power off, Install the thermo block again, then power on.
			Contact the manufacturer
5	Self-test, Cap Sensor –error	Heated lid damaged or bad contacted	Contact the manufacturer
6	Self-test, TE1 Ref, TE2 Ref, TE3 Ref--error	Ventilation holes are blocked Cooling chip damaged	Clear blockage of ventilation holes Contact the manufacturer
7	Self-test, TE1 Heat, TE2 Heat,TE3	Heating parts of the thermo block damaged.	Contact the manufacturer

	Heat --error		
8	Self-test, CapHeat --error	Heating part of Heated lid damaged	Contact the manufacturer
9	Heated lid cannot heat	The heated lid is closed at the system setting interface.	Open the heated lid, Set a temperature.
		The heated lid damaged	Contact the manufacturer
10	The reagent in the reaction tube evaporates	The heated lid is closed	Open the heated lid, Set a temperature.
		The reaction tube was placed unevenly	Try to place symmetrically
		The cap of the reaction tube is not tight fit	Fit tightly before put into the instrument

CONTACT US

DLAB Scientific Co., Ltd

Yu An Road 31, Beijing Airport Economic core zone,

Shun yi District, Beijing, China 101318

Tel: 86-10- 85653451/52/53

Fax: 86-10-85653383

E- mail: info@dlabsci.com

web: www.dlabsci.com